Operating instructions (EN)

ECAIA ionizer S faucet

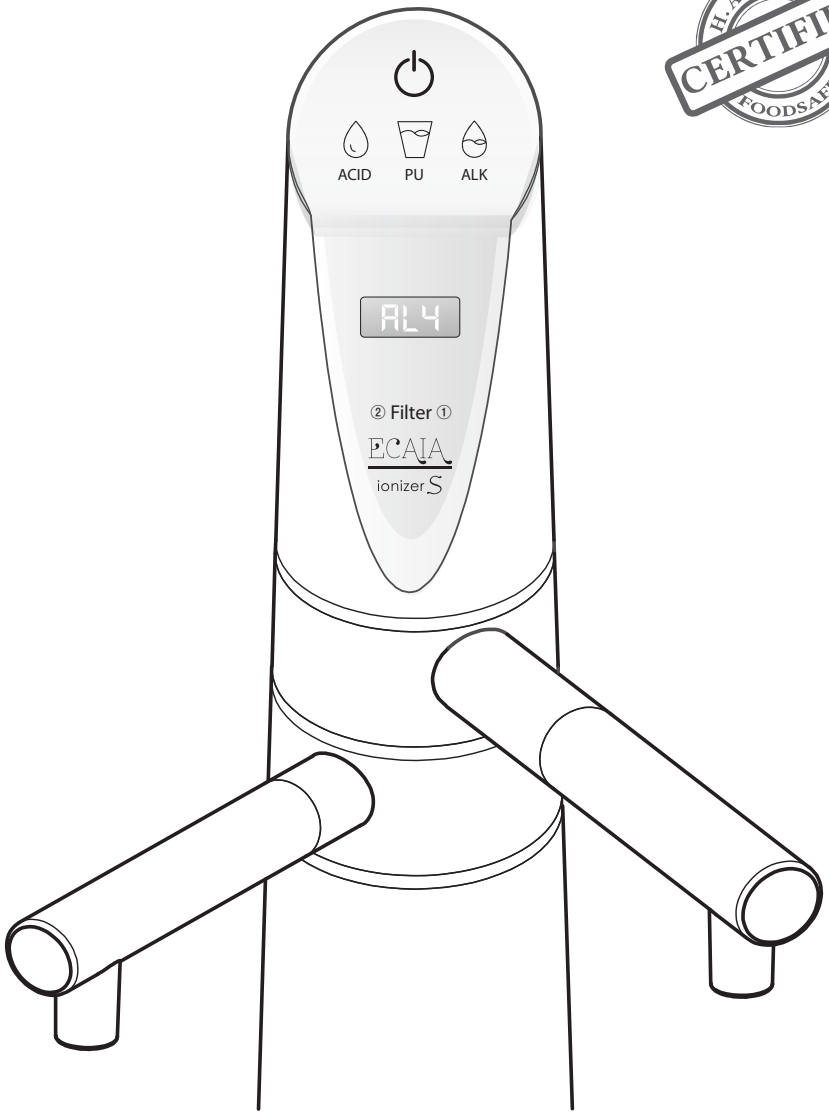

Additional faucet for ECAIA ionizer S

Additional operating instructions to be used in combination with User manual for the ECAIA ionizer S

Distributed worldwide by:
SANUS**LIFE** INTERNATIONAL GmbH
Luigi Negrelli 13/C, 39100 Bolzano (I)
www.sanuslife.com - info@sanuslife.com

Version 23.03.10

C Scope of delivery ECAIA ionizer S faucet

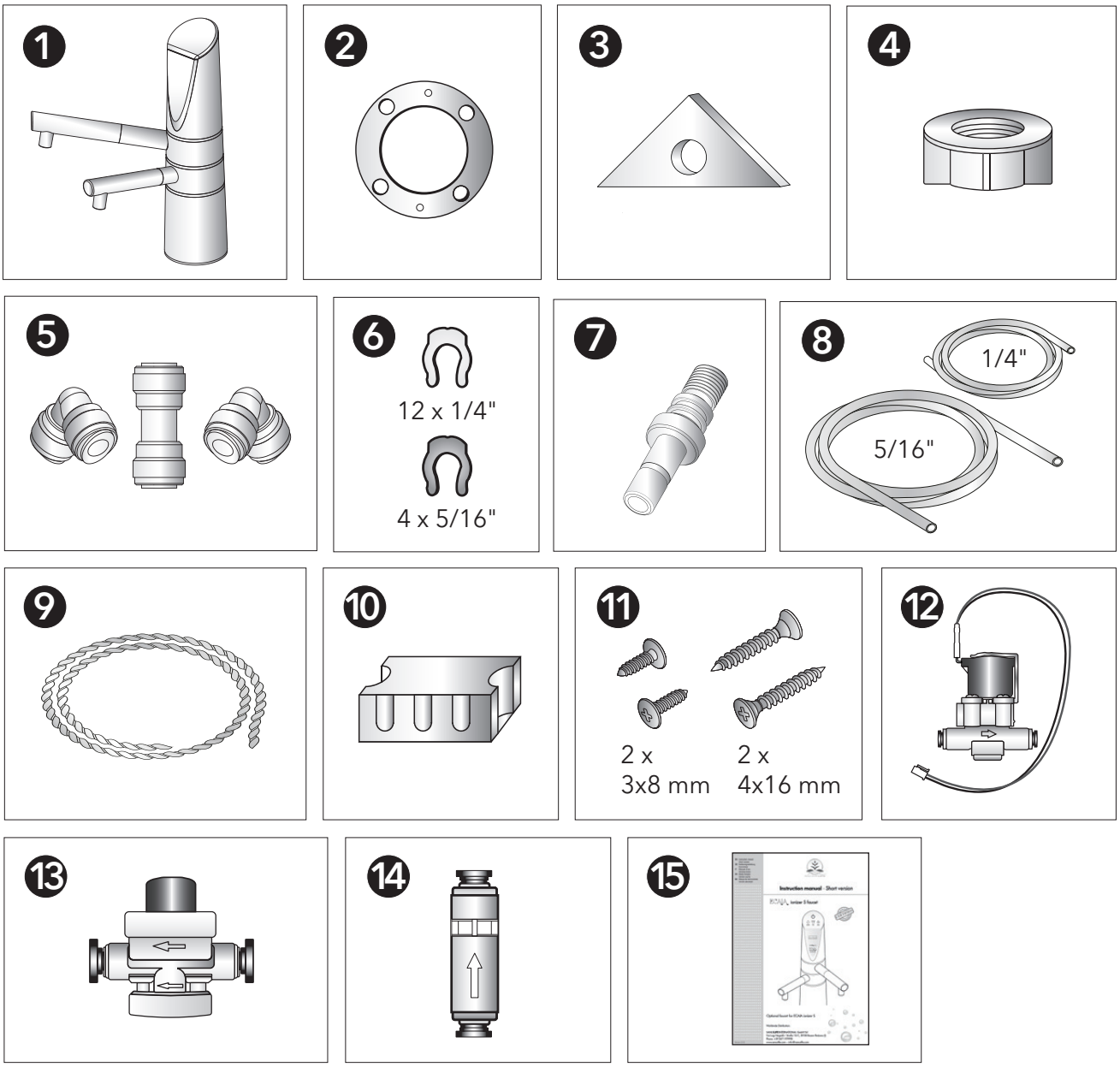

D ECAIA ionizer S faucet - Display

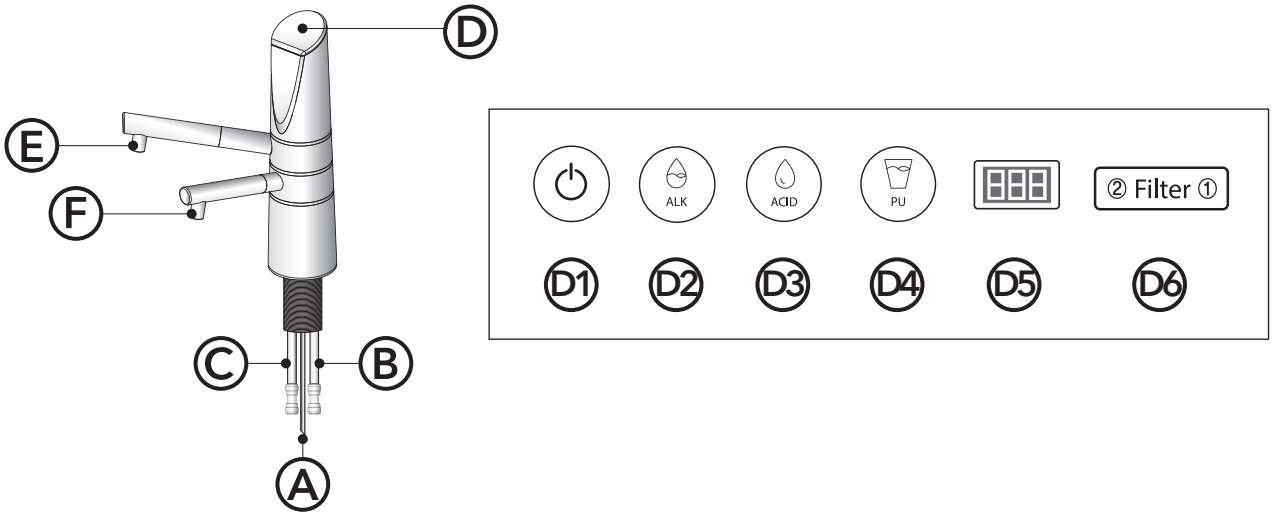

E Installation diagram

Point 4.1, page 6

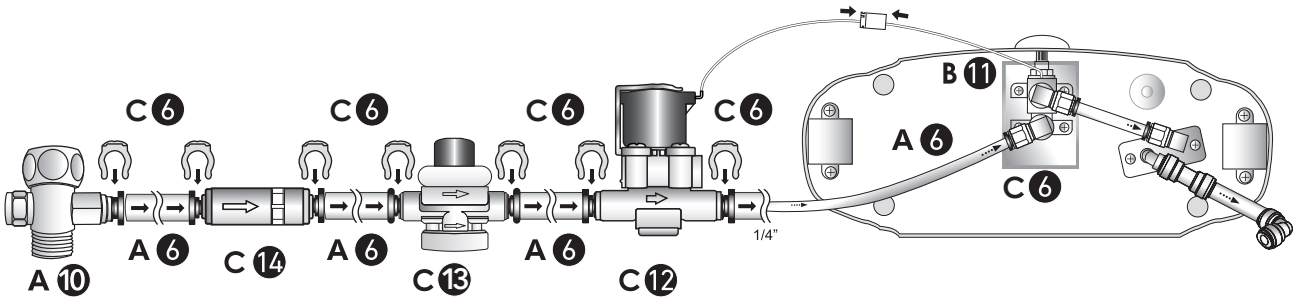

F Installation diagram

Point 4.2, page 7

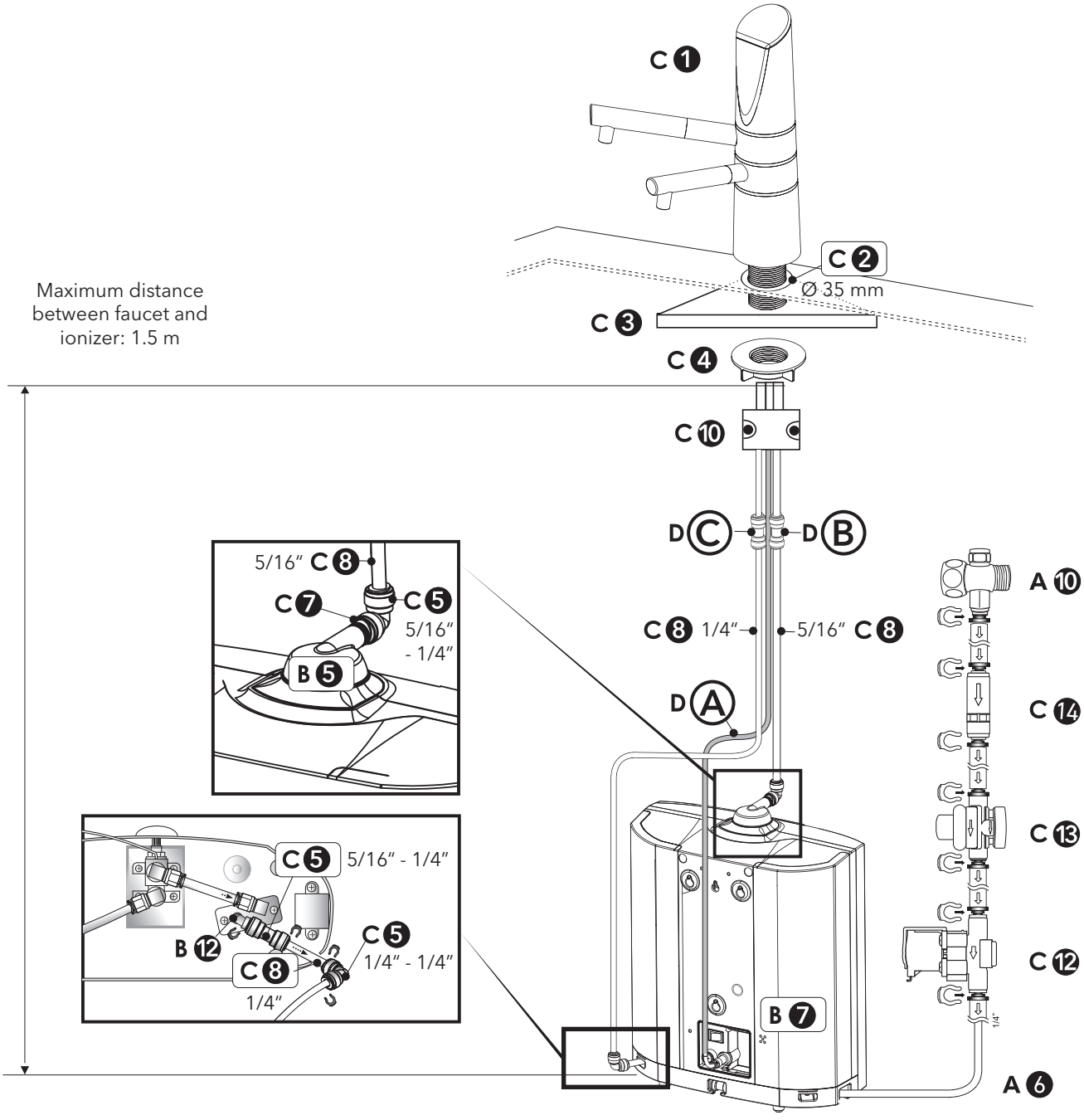

1 Table of contents

C Scope of delivery ECAIA ionizer S faucet 2
D ECAIA ionizer S faucet - Display 2
E Installation diagram (4.1) 3
F Installation diagram (4.2) 3

1 Table of contents 4
2 Scope of delivery ECAIA ionizer S faucet 4
3 ECAIA ionizer S faucet - Display 5
4 Installation of ECAIA ionizer S+ and ECAIA ionizer S faucet 6
4.1 Permanent connection to the angle valve (ECAIA ionizer S+; appliance in below counter position) 6
4.2 Installation of the additional ECAIA ionizer S faucet 7
4.3 Reprogramming the ECAIA ionizer S control to ECAIA ionizer S+ 9
4.4 Reprogramming the ECAIA ionizer S+ control to ECAIA ionizer S 11
4.5 Language settings 12
4.6 Volume configuration via the submenu 13
5 Operation of ECAIA ionizer S faucet 13

2 Scope of delivery ECAIA ionizer S faucet

The following items are included in the scope of delivery (see Figure C on page 2).

❶ 2-way water tap - ECAIA ionizer S faucet
❷ Seal for faucet
❸ Reinforcing plate
❹ Fixing nut
❺ Quick release fastener:
  1 x adapter 5/16" to 1/4"
  1 x angle adapter 90° 5/16" to 5/16"
  1 x angle adapter 90° 1/4" to 1/4"
❻ Safety clips for quick release fastener:
  12 x 1/4"
  4 x 5/16"
❼ Outlet adapter for alkaline water 5/16"
❽ Water outlet hose:
  1 x outlet hose for alkaline water 5/16"
  1 x outlet hose for acidic water 1/4"
❾ Cord band
❿ Hose fixing panel (2 parts)
⓫ Screw for hose fixing panel (C-10);
  2 x 3x8mm
  2 x 4x16mm
⓬ Solenoid valve
⓭ Water pressure reducing valve
⓮ Filter for tap water supply hose 1/4"
⓯ Instruction manual (short version)

3 ECAIA ionizer S faucet - Display

Compare table D (p. 2).

Ⓐ **Control cable** – transmits signal to the ECAIA ionizer S+

Ⓑ **Quick release fastener 5/16"** – connection for alkaline water outlet

Ⓒ **Quick release fastener 1/4"** – connection for acidic water outlet

Ⓓ **Display** (ECAIA ionizer S faucet)

D1 **Power button** – for switching the device on and off

D2 **Button for alkaline levels (ALK)** – Selection of the ionization power of the alkaline water; alkaline water flows out of the upper outlet (E) (1 = weak, 5 = strong).

D3 **Button for acidic levels (ACID)** – Selection of the ionization power of the acidic water; acidic water flows out of the upper outlet (E) (1 = weak, 2 = strong).

D4 **Button of the level purify (PU)** – filtered water flows out of the upper and lower outlets (E/F); ionization is deactivated.

D5 **Display** – indicates the selected ionization level.

- AL1 = alkaline level 1
- AL2 = alkaline level 2
- AL3 = alkaline level 3
- AL4 = alkaline level 4
- AL5 = alkaline level 5
- AC1 = acidic level 1
- AC2 = acidic level 2
- PU = PURIFY

D6 **Filter indicator** – depending on which filter (1 or 2) lights up, the flow rate (0 to 999, For details see complete operating instructions ECAIA ionizer S) is shown on the display (D5). The button PURIFY (D4), allows you to switch between filter 1 and 2 when the device is switched off.

Ⓔ **Upper water outlet** – Alkaline water outlet (acidic water outlet if the ACID program has been selected)

Ⓕ **Lower water outlet** – Acidic water outlet (alkaline water outlet if the ACID program has been selected)

Note: In principle, you should always consume the water that flows out of the upper water outlet (E).

4 Installation of ECAIA ionizer S+ and ECAIA ionizer S faucet

4.1 Permanent connection to the angle valve (ECAIA ionizer S+; appliance in below counter position)

Compare table E (page 3).

The ECAIA ionizer S+ can be permanently connected to the angle valve under the sink, as described under point "1.4 - Permanent connection to the angle valve (appliance in above-counter position)". Due to the positioning of the device under the sink, it must be operated using the special ECAIA ionizer S faucet.

1. Install the T-piece (A-10) on the angle valve of the cold water pipe. If necessary, the cold water supply pipe to the faucet must be disconnected and connected with the T-piece in between.

   CAUTION: When assembling please make sure the connection pins on the T-piece do not bend sideways. This may cause a micro crack, which can even lead to breakage due to the constant water pressure.

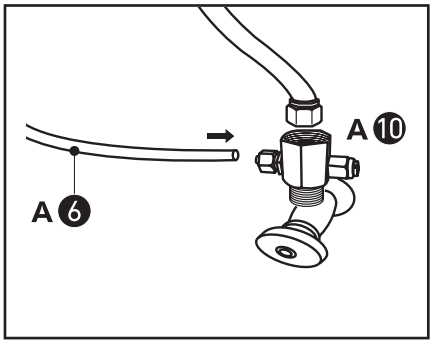

2. Verbinden Sie den Trinkwasser-Zulaufschlauch (A-6) mit der Schnellverschluss-Öffnung am T-Stück (A-10) und fixieren Sie den Sicherheitsstift 1/4" (C-6).

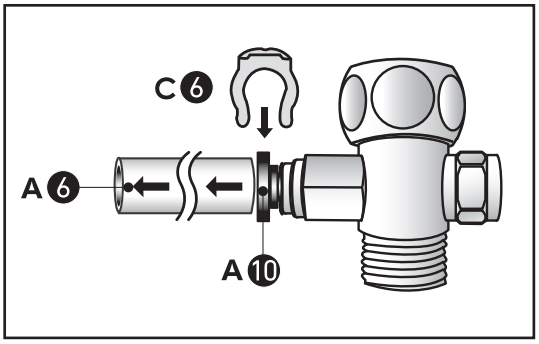

3. Connect the other end of the tap water supply hose (A-6) to the filter for the 1/4" tap water supply hose (C-14) (note the flow direction!). Use 5 cm of the tap water supply hose (A-6) to connect the filter for the 1/4" tap water supply hose (C-14) and the water pressure reducing valve (C-13) (note the flow direction!). Use 5 cm of the tap water supply hose (A-6) to connect the water pressure reducing valve (C-13) and the solenoid valve(C-12) (note the flow direction!). Use 20 cm of the tap water supply hose (A-6) to connect the solenoid valve (C-12) to the

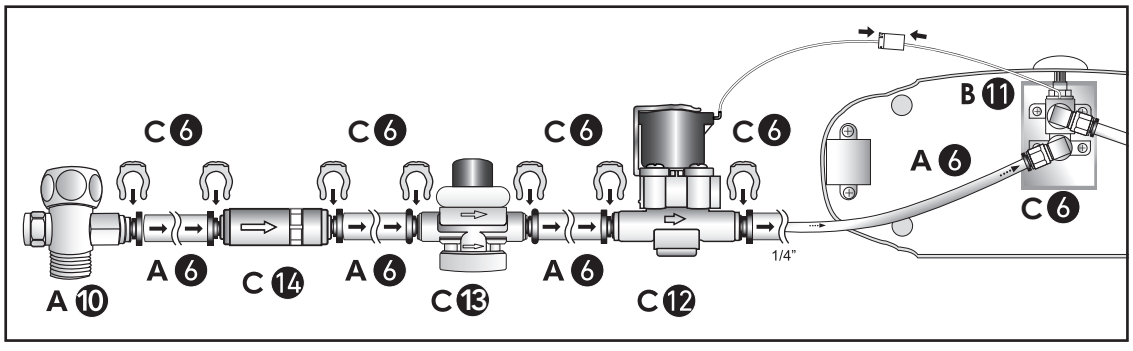

quick-release fastener opening of the water inlet (B-11) on the bottom of the ECAIA ionizer S. Finally, fix the 5 1/4" safety pins (C-6) in place. Afterwards, connect the cable of the solenoid valve (C-12) to the cable plug-in connector on the bottom of the ECAIA ionizer S.

4. The water pressure can be adjusted with the adjustment screw on the T-piece (A-10).

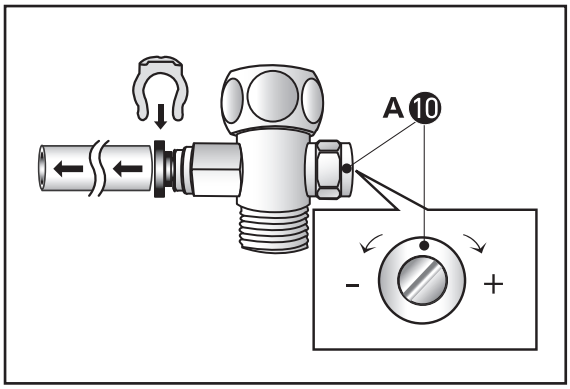

Note: If there is not enough water pressure, remove the water pressure reducing valve (C-13) if necessary. If the flow becomes slower after a while, the filter (A-7) and/or the water pressure reducing valve (C-13) may be dirty and may need to be cleaned or replaced.

4.2 Installation of the additional ECAIA ionizer S faucet

Compare table F (page 3).

In order to avoid damaging the fixtures and fittings, the hoses should be connected by a professional.

1. Connect the 5/16" outlet hose for alkaline water (C-8) to the 5/16" quick release fastener (D-B) on the fitting and secure the 5/16" safety pin (C-6).

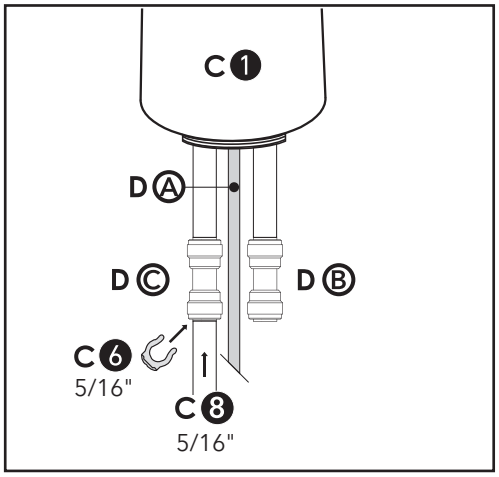

2. Connect the 1/4" outlet hose for acidic water (C-8) to the 1/4" quick-release fastener on the fitting and secure the 1/4" safety pin (C-6).

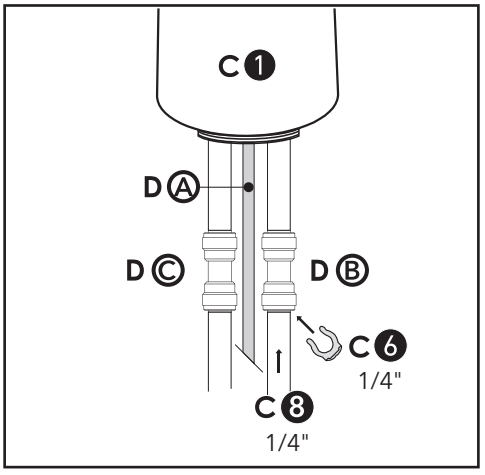

3. Choose a location next to the sink for the 2-way fitting (C-1) so that it can be operated professionally without interfering with the work around the sink. The location you choose should be approx. 4 cm (1.5") from the edge of the sink and approx. 30 cm (11"-12") from the faucet.

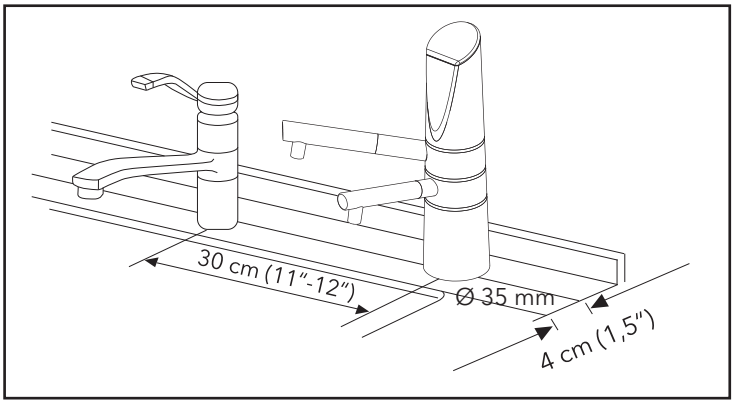

4. Drill a suitable hole (Ø 35 mm) at the selected point on the work surface or at the edge of the sink. Pass the control cable (D-A), the 5/16" outlet hose for alkaline water (C-8) and the 1/4" outlet hose for acidic water (C-8) through the opening so that the 2-way fitting (C-1) can be mounted. Use the parts supplied for mounting:

   - Seal for fitting (C-2)
   - Fixing plate (C-3)
   - Fixing nut (C-4)

   IMPORTANT: The control cable (D-A) may only be connected to the connector provided under the terminal cover (B-7) on the rear of the ECAIA ionizer S+ after the ECAIA ionizer S control has been reprogrammed (see point 4.3) to the ECAIA ionizer S+!

5. Attach the 5/16" outlet adapter for alkaline water (C-7) to the upper water outlet (B-5) on the device by screwing it in until it stops (the flexible outlet hose for alkaline water (A-2) is not required). Then, connect the 5/16" quick-release angle adapter (C-5) to the 5/16" outlet adapter for alkaline water (C-7). After that, connect the 5/16" outlet hose for alkaline water (C-8) to the 5/16" quick-release angle adapter (C-5) on the device. Finally, firmly secure the 2 5/16" safety pins (C-6).

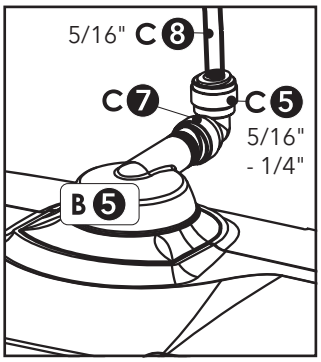

6. Connect the 5/16" to 1/4" quick-release fastener adapter (C-5) to the lower water outlet (B-12) on the device. Connect the 5/16" to 1/4" quick-release fastener adapter (C-5) and the 1/4" quick-release angle adapter (C-5) using the 1/4" outlet hose for acidic water (C-8) as required (5-12cm). Then, connect the 1/4" outlet hose for acidic water (C-8) to the 1/4" quick-release angle adapter (C-5) on the device. Finally, firmly secure the 5/16" safety pin (C-6) and the 3 1/4" safety pins (C-6).

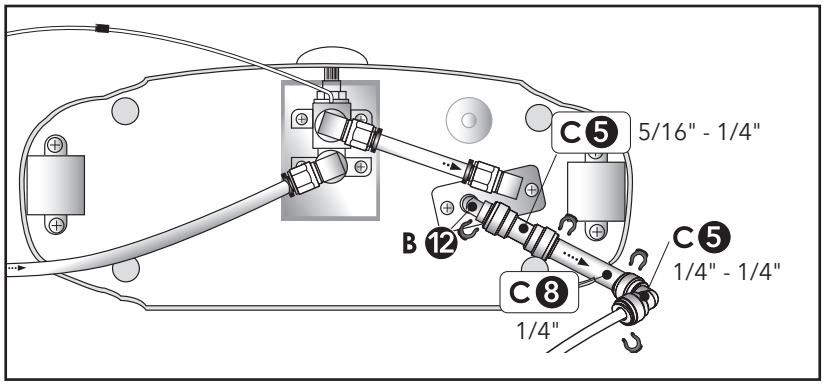

The ECAIA ionizer S can be placed in a lower cabinet or mounted to the wall. To do this, please follow the instructions under point "1.6 - ECAIA ionizer S Wall Mounting" in the complete user manual (long version) for the ECAIA ionizer S.

The water outlet hose (C-8) and the control cable (D-A) can be affixed to the hose fixing panel (C-10) as desired and bundled with the cord band (C-9).

4.3 Reprogramming the ECAIA ionizer S control to ECAIA ionizer S+

To use the ECAIA ionizer S as an under-sink model in combination with the ECAIA ionizer S faucet, the control unit must first be upgraded to ECAIA ionizer S+. Proceed as follows:

1. Plug the power cable of the ECAIA Ionizer S into the socket. The device requires 230V (US model 120V).

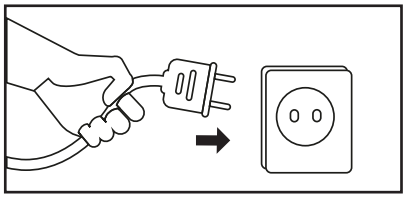

2. Press and hold on the ECAIA ionizer S the button combination "alkaline level 5" (B-24) and "PURIFY" (B-26) at the same time until the display (B-2) switches on and the "F-0" is displayed.

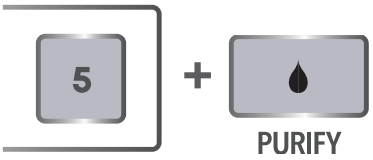

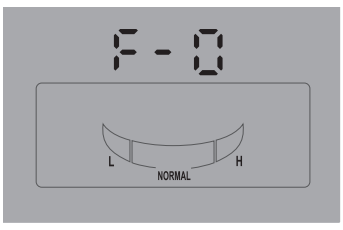

3. Press and hold the “acidic level 1” (B-25) button on the ECAIA ionizer S until “F-1” is displayed.

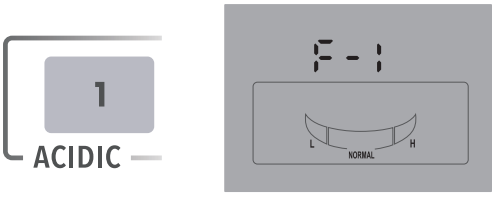

4. Press and hold on the ECAIA ionizer S the button combination “alkaline level 5” (B-24) and “PURIFY” (B-26) at the same time until the display (B-2) switches off. This saves the setting.

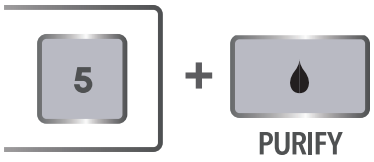

5. Unplug the power cable of the ECAIA ionizer S from the socket so that the device no longer receives power.

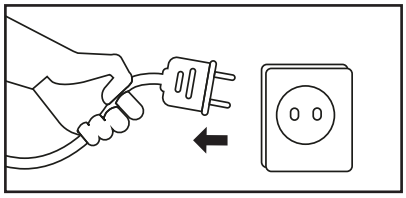

6. Connect the control cable (D-A) to the connector provided under the connection cover (B-7) on the rear of the ECAIA ionizer S.

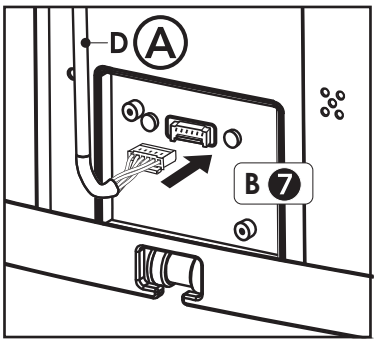

7. Plug the power cable of the ECAIA Ionizer S into the socket. The display on the ECAIA ionizer S is deactivated. The ECAIA ionizer S+ is now only be operable via the buttons on the ECAIA ionizer S faucet.

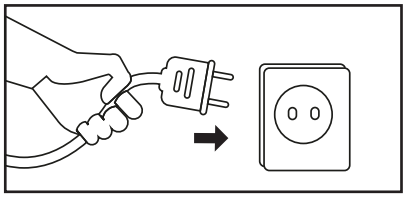

4.4 Reprogramming the ECAIA ionizer S+ control to ECAIA ionizer S

If you wish to use the ECAIA ionizer S+ again without the ECAIA ionizer S faucet, you can reprogram the ECAIA ionizer S controls as described below:

1. On the ECAIA ionizer S faucet, press and hold the “Power (D-D1)” and “Alkaline levels (ALK) (D-D2)” buttons at the same time until “F-1” appears on the display.

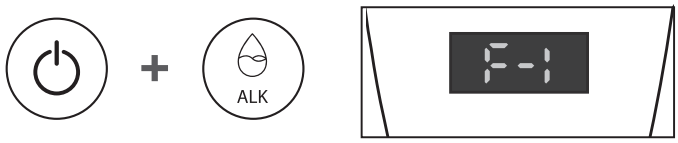

2. On the ECAIA ionizer S faucet, press and hold the “Acidic levels (ACID) (D-D3)” button until “F-0” appears on the display.

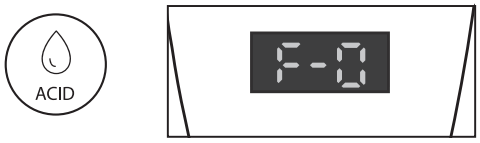

3. On the ECAIA ionizer S faucet, press and hold the “Power (D-D1)” and “Alkaline levels (ALK) (D-D2)” buttons at the same time until the display switches off. This saves the setting.

4. Unplug the power cable of the ECAIA ionizer S+ from the socket so that the device is no longer connected to the electricity supply.

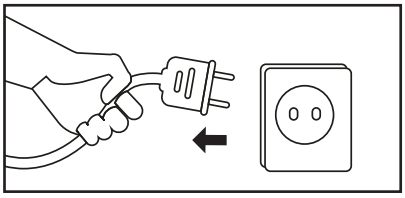

5. Carefully disconnect the control cable (D-A) from the connector under the connection cover on the back of the ECAIA ionizer S+.

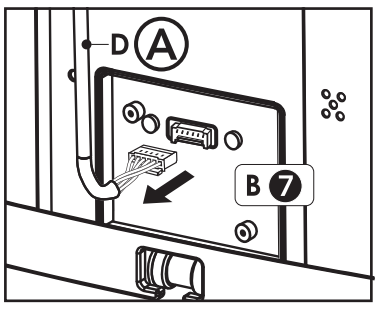

Warning: Do not pull on the individual cables at the plug of the control cable (D-A) as this may damage the cable!

6. Plug the power cable of the ECAIA ionizer S+ into the socket. You can now use the ECAIA ionizer S+ again using the control panel (B-1) on the ECAIA ionizer S+.

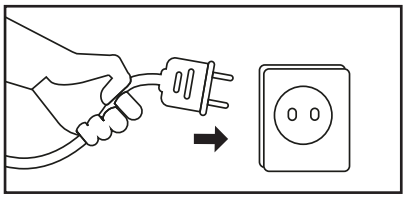

4.5 Language settings

If you want to change the language via the ECAIA ionizer S faucet, proceed as follows:

1. With the device switched on, press the "Button of the level purify (PU) (D-D4)" and hold it down for at least 3 seconds. "LA0" appears on the display.

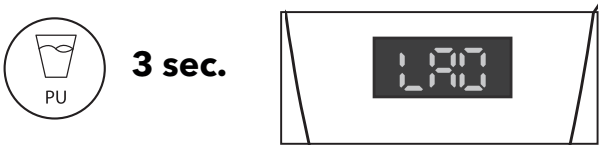

2. You can select the desired language by pressing the "Button of the level purify (PU) (D-D4)" again:

LA0 = English
LA1 = German
LA2 = Italian
LA3 = Spanish

3. After you have selected the language, wait at least 3 seconds until the display switches off again and the selected language is automatically saved.

4.6 Volume configuration via the submenu

To configure via the ECAIA ionizer S faucet, proceed as follows:

1. Switch off the device and simultaneously press ”Button of the level purify (PU) (D-D4)” and ”Button for alkaline levels (ALK) (D-D2)” and hold them down for at least 3 seconds. Afterwards the display turns on.

2. Press ”Button for alkaline levels (ALK) (D-D2)” until „U3“ appears on the display.

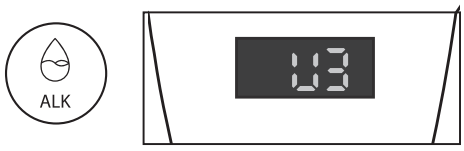

3. By pressing ”Button for acidic levels (ACID) (D-D3)” you can select the desired volume:

U3 = loud
U2 = medium
U1 = quiet
U0 = mute

4. When you have selected the desired volume, press ”Button of the level purify (PU) (D-D4)” and ”Button for alkaline levels (ALK) (D-D2)” again at the same time and hold them until the display switches off. This saves the setting.

Note: Please make sure you do not make any other adjustments in the submenu. There is a risk of changing other parameters and thus impairing the function of the device!

5 Operation of ECAIA ionizer S faucet

The device can be switched on and off using the power button (D-D1).

The button “ALK” for alkaline levels (D-D2) allows you to switch between alkaline levels 1, 2, 3, 4 and 5. To do this, read the instructions under point “1.12 - Description of the buttons” in the full user manual (long version) for the ECAIA ionizer S.

By pressing and holding the ALK button (D-D2) for more than 5 seconds, you can set the ionization output for the selected alkaline level. To do this, read the instructions under point “1.14 - Setting ionization output” in the full user manual (long version) for the ECAIA ionizer S.

The button “ACID” for acidic levels (D-D3) allows you to switch between acidic levels 1 and 2. To do this, read the instructions under point “1.12 - Description of the buttons” in the full user manual (long version) for the ECAIA ionizer S.

By pressing and holding the ACID button (D-D3) for more than 5 seconds, you can set the ionization output for the selected acid level. To do this, read the instructions under point “1.14 - Setting ionization output” in the full user manual (long version) for the ECAIA ionizer S.

By pressing the button “PU” (D-D4), only filtered water is produced.
To do this, read the instructions under point “1.12 - Description of the buttons” in the full user manual (long version) for the ECAIA ionizer S.

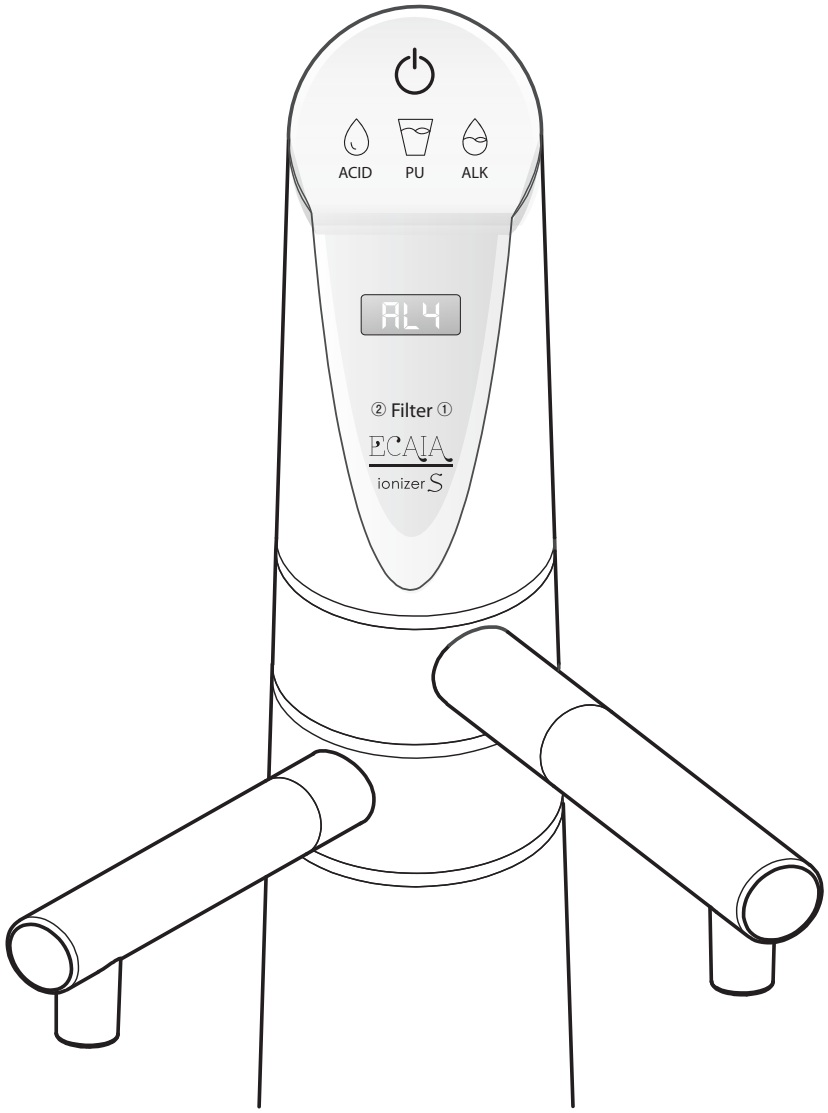

Additional faucet for ECAIA ionizer S

Distributed worldwide by:

SANUS**LIFE** INTERNATIONAL GmbH
Luigi Negrelli 13/C, 39100 Bolzano (I)
www.sanuslife.com - info@sanuslife.com